VA Series

Electric Forklift Trucks with AC Technology

1,600kg, 1,800kg and 2,000kg

- YaleStop automatic park brake eliminates uncontrolled roll-back on ramps
- Auto deceleration
- CANbus technology
- High-performance AC motor technology
- Continuous Stability Enhancement
- eLo and HiP performance settings

Yale®

People. Products. Productivity.

Truck Dimensions

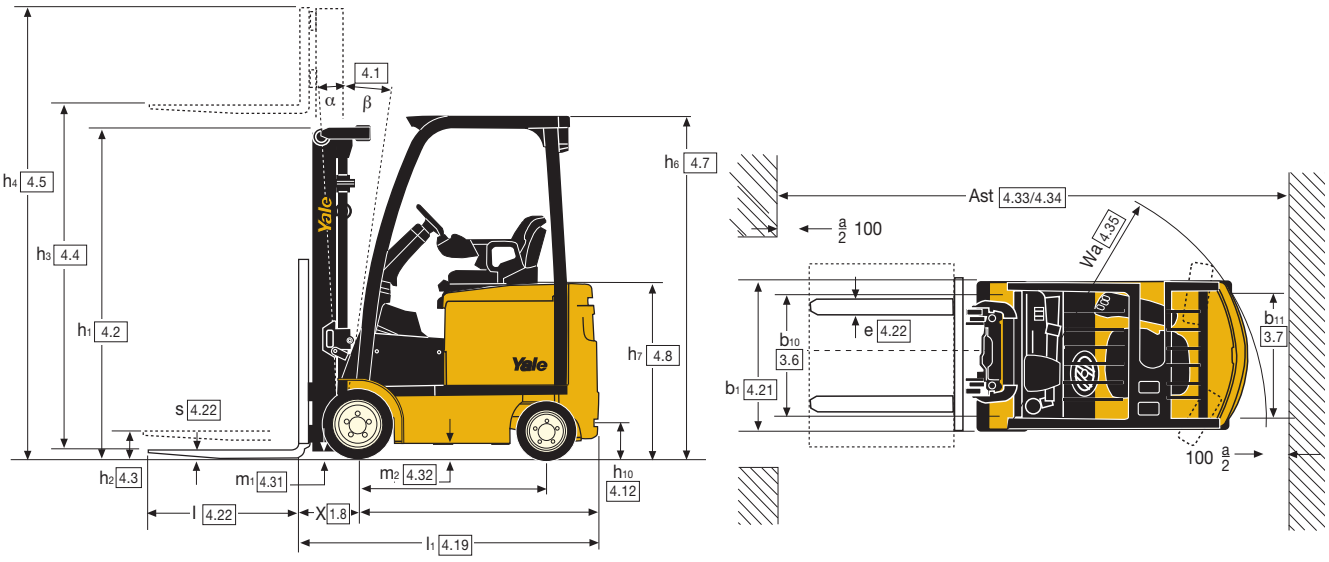

ERC16 VA, ERC 18VA mast details and capacity ratings (kg) - Cushion tyres

Model							ERP 16 VA						ERP 18 VA					
Tyres							18 x 6 x 12-1/8						18 x 6 x 12-1/8					
Width across tyres							945mm						945mm					
Masts	OAH h1	FFH h2+s	MFH h3+s	h4	Tilt F	Tilt B	Forks Load Centre 500	Forks Load Centre 600	Forks Load Centre 700	Integral Sideshift Load Centre 500	Integral Sideshift Load Centre 600	Integral Sideshift Load Centre 700	Forks Load Centre 500	Forks Load Centre 600	Forks Load Centre 700	Integral Sideshift Load Centre 500	Integral Sideshift Load Centre 600	Integral Sideshift Load Centre 700
2 Stage LFL (V)	2180	140	3430	4006(1)	5	5	1600	1530	1360	1600	1450	1320	1800	1700	1540	1790	1610	1460
	2380	140	3830	4406(1)	5	5	1600	1520	1360	1600	1440	1310	1800	1690	1530	1780	1600	1460
	2730	140	4330	4906(1)	5	5	1600	1510	1360	1560	1430	1300	1760	1640	1490	1690	1560	1420
2 Stage FFL (F)	2180	1505(2)	3415	4012(1)	5	5	1600	1530	1360	1600	1450	1320	1800	1700	1540	1790	1610	1460
3 Stage FFL (E)	2130	1466(2)	4900	5474(1)	5	5	1520*	1440*	1290*	1520*	1360*	1240*	1670*	1570*	1420*	1650*	1480*	1350*
	2280	1616(2)	5200	5774(1)	5	5	1400*	1400*	1250*	1410*	1320*	1200*	1460*	1460*	1370*	1470*	1440*	1300*
	2380	1716(2)	5500	6074(1)	5	5	1240*	1240*	1210*	1240*	1240*	1160*	1280*	1280*	1280*	1280*	1280*	1260*

ERC 20VA mast details and capacity ratings (kg) - Cushion tyres

Model							ERP 20 VA					
Tyres							18 x 7 x 12-1/8					
Width across tyres							986mm					
Masts	OAH h1	FFH h2+s	MFH h3+s	h4	Tilt F	Tilt B	Forks Load Centre 500	Forks Load Centre 600	Forks Load Centre 700	Integral Sideshift Load Centre 500	Integral Sideshift Load Centre 600	Integral Sideshift Load Centre 700
2 Stage LFL (V)	2180	140	3430	4006(1)	5	5	2000	1900	1720	2000	1800	1630
	2380	140	3830	4406(1)	5	5	2000	1890	1710	1990	1790	1630
	2730	140	4330	4906(1)	5	5	1950	1840	1670	1920	1750	1590
2 Stage FFL (F)	2180	1505(2)	3415	4012(1)	5	5	2000	1880	1710	1980	1790	1620
3 Stage FFL (E)	2130	1466(2)	4900	5474(1)	5	5	1800*	1780*	1610*	1810*	1680*	1530*
	2280	1616(2)	5200	5774(1)	5	5	1560*	1560*	1560*	1570*	1570*	1490*
	2380	1716(2)	5500	6074(1)	5	5	1360*	1360*	1360*	1360*	1360*	1360*

* Wide tread required

(1) Add 649mm with load backrest extension.

(2) Deduct 649mm with load backrest extension.

VDI 2198 - General Specifications

Characteristics	1.1	Manufacturer		Yale		Yale		Yale	
	1.2	Model designation		**ERC 16VA**		**ERC 18VA**		**ERC 20VA**	
	1.3	Power: battery, diesel, LPG, electric mains, orderpicker		Battery		Battery		Battery	
	1.4	Operation: manual, pedestrian, stand, seat		Seat		Seat		Seat	
	1.5	Load capacity	Q (kg)	1600		1800		2000	
	1.6	Load centre	c (mm)	500		500		500	
	1.8	Load distance, centre of drive axle to fork	x (mm)	360		360		360	
	1.9	Wheelbase	y (mm)	1220		1220		1220	
Weights	2.1	Unladen weight (max. battery)	kg	3414		3532		3719	
	2.2	Axle loading, laden front/rear (max. battery)	kg	4233	782	4547	786	4881	838
	2.3	Axle loading, unladen front/rear (max. battery)	kg	1506	1908	1479	2053	1473	2246
Wheels & Tyres	3.1	Tyres: L = Pneumatic, V = Cushion SE = Supercushion		V		V		V	
	3.2	Tyre size, front		18x6x12.125		18x6x12.125		18x7x12.125	
	3.3	Tyre size, rear		15x5x11.25		15x5x11.25		15x5x11.25	
	3.5	Number of wheels, front/rear (X = driven)		2X / 2		2X / 2		2X / 2	
	3.6	Tread, front (standard/wide tread)	b_{10} (mm)	788	939	788	939	808	906
	3.7	Tread, rear	b_{11} (mm)	822		822		817	
Dimensions	4.1	Mast tilt, forward a /back b	degrees	5 / 5		5 / 5		5 / 5	
	4.2	Height of mast, lowered	h_1 (mm)	2180		2180		2180	
	4.3	Free lift ▼	h_2 (mm)	100		100		100	
	4.4	Lift height ▼	h_3 (mm)	3390		3390		3390	
	4.5	Height of mast, extended ✚	h_4 (mm)	4006		4006		4006	
	4.7	Height to top of overhead guard ❍	h_6 (mm)	2250		2250		2250	
	4.8	Seat height ✘	h_7 (mm)	1161		1161		1161	
	4.12	Towing coupling height	h_{10} (mm)	232		232		232	
	4.19	Overall length	l_1 (mm)	2908		2929		2968	
	4.20	Length to face of forks	l_2 (mm)	1908		1929		1968	
	4.21	Overall width (standard/wide tread)	b_1/b_2 (mm)	945	1091	945	1091	986	1084
	4.22	Fork dimensions	s/e/l (mm)	40 / 80 / 1000		40 / 80 / 1000		40 / 100 / 1000	
	4.23	Fork carriage DIN 15173. Class, A/B		2A		2A		2A	
	4.24	Fork carriage width ◗	b_3 (mm)	907		907		907	
	4.31	Ground clearance, laden, below mast	m_1 (mm)	87		87		87	
	4.32	Ground clearance at centre of wheelbase	m_2 (mm)	92		92		92	
	4.33	Aisle width with pallets 1,000mm long x 1,200mm wide	Ast (mm)	3216		3226		3261	
	4.34	Aisle width with pallets 800mm wide x 1,200mm long	Ast (mm)	3404		3417		3452	
	4.35	Outer turning radius	Wa (mm)	1644		1657		1692	
	4.36	Inner turning radius	b_{13} (mm)	417		447		447	
Performance	5.1	Travel speed laden/unladen ➔	km/h	18.4	18.4	18.4	18.4	18.4	18.4
	5.2	Lifting speed laden/unladen	m/sec	0.53	0.72	0.49	0.72	0.47	0.72
	5.3	Lowering speed laden/unladen	m/sec	0.51	0.47	0.51	0.47	0.51	0.47
	5.5	Drawbar pull laden/unladen, 60 minute rating	N	3156	2862	3088	2804	3023	2745
	5.6	Maximum drawbar pull laden/unladen, 5 minute rating	N	12964	12422	12709	12178	12459	11924
	5.7	Gradeability with/without load, 30 minute rating	%	5.8	7.4	5.6	7.4	5.4	7.4
	5.8	Maximum gradeability with/without load, 5 minute rating	%	24.2	34.0	23.5	33.8	23.2	33.6
	5.9	Acceleration time with/without load 10m ➔	sec	4.8	4.4	4.9	4.4	5.0	4.5
	5.10	Service brake		Hydraulic		Hydraulic		Hydraulic	
Motor	6.1	Drive Motor Rating, S2, 60min	kW	18.4		18.4		18.4	
	6.2	Lifting motor, S3 15% rating	kW	15.9		15.9		15.9	
	6.3	Battery DIN 43531/35/36 A, B, C, no		no		no		no	
	6.4	Battery voltage/capacity (6hr rate AM & 5hr rate EUR)	V/Ah	48	660	48	660	48	660
	6.5	Battery weight (min/max)	kg	943	1132	943	1132	943	1132
	6.6	Power consumption in accordance with VDI cycle ✻	kWh/h	4.5		4.93		5.53	
Other	8.2	Operating pressure for attachments	bar	180		180		180	
	8.3	Oil flow for attachments ↕	l/min	20-40		20-40		20-40	
	8.4	Average noise level at operator's ear ★	dB (A)	68		68		68	
	8.5	Towing coupling type		Pin		Pin		Pin	

★ L_{PAZ} ,measured according to the test cycles and based on the weighting values contained in EN12053.
▼ Bottom of forks.
✘ Full suspension seat specified.
✚ Without load backrest.
◗ Add 43mm with load backrest.
❍ h6 subject to +/- 5mm tolerance.
↕ Maximum flow set through dash display.
➔ HiP performance setting.
✻ eLo performance setting.

VA Series

Models: 16VA, 18VA, 20VA

Yale® ERC-VA electric trucks are available in 1600 -2000kg capacities designed for demanding applications that require clean, quiet-running, heavy-duty capability.

These trucks are extremely manoeuverable and offer plenty of power and high stacking ability, while also offering excellent ergonomics, reliability and maintenance ease.

AC Technology

The Yale 18.4 kW AC technology traction motor is suitable for the most arduous applications. Smooth forward and reverse directional changes provide seamless driving action. In the high-performance or 'HiP' setting, AC technology provides increased speed and acceleration and increased speed on gradients, even when fully laden.

Brakes

The fully automatic park brake is applied once the truck stops and is de-activated, once the accelerator pedal is pressed. The standard Auto Deceleration System automatically slows the truck when the operator's foot is removed from the accelerator pedal, extending brake life.

Steering

The 15.9kW AC motor drives a pump which provides oil pressure for all the hydraulic functions and steering, eliminating the need for a separate steering motor and pump. The gas spring assisted steering column is mounted on the truck's cowl providing unrestricted floor space. It is infinitely adjustable in a range of 26º and is contoured for easy on/off access.

Telescopic adjustment of 75mm and memory tilt are available as an option.

The continuous Stability Enhancement System is a passive mechanical system that optimizes steer axle geometry to reduce truck lean by limiting articulation.

Transmission of surface shocks and vibrations to the operator and load when travelling over uneven ground conditions are also reduced. The system is 100% maintenance free.

Performance modes

The Yale VA series of lift trucks feature an 'eLo' energy saving setting, which provides exceptional energy efficient performance for continuous operation over longer periods, increasing the time between battery charges. Should the application conditions be more demanding and require higher top speeds and acceleration to deliver higher productivity, a 'HiP' high performance setting can be activated via the dash display with a service password.

The performance of the VA series can be further tailored via the enhanced 'heads up' display. The requirements of the application or the operator's preferences can be set by selecting one of the 4 performance modes. Selecting 'Mode 4' provides maximum speed and acceleration whilst 'Mode 1' is ideal for more precise maneuvering. Yale trained service technicians can easily adjust the top speed and acceleration.

Ergonomics

The VA series is designed for optimum operator comfort. The operator is positioned ergonomically for maximum safety, comfort, visibility and ease of operation. Whole body vibration (WBV) transmitted to the operator is reduced by the full suspension seat that is easily adjusted for weight and stature and has 80mm of suspension travel. This provides the operator with the most comfortable working environment reducing fatigue and increasing productivity. A swivel seat option provides a superior reverse driving position.

A low intermediate step with anti-slip mesh, clear foot-well and generous floorspace with nonslip rubber floor mat provide easy 'on' and 'off' access from both sides of the truck. Front and rear (with horn) operator grab handles aid entry and driving in the reverse direction.

Seat side contoured manual levers are standard. A 'Forward/Reverse' direction switch is integrated into the hoist lever and an emergency stop button positioned into the manual lever console for easy application.

The Accutouch mini-lever module (MLM) provides the best in intuitive and relaxed operation of all control functions. A cushioned arm and palm rest and splayed mini levers for fingertip control help reduce RSI and increase productivity. A 'Forward/ Reverse' direction switch with detent, emergency stop button and horn are all positioned on the MLM within easy reach of the operator. Travel direction is displayed on the 'heads up' display.

'Return to set tilt' and '4th function with clamp' button options are integrated into the MLM to alleviate operator fatigue when aligning forks for load drop and retrieval.

The 'heads up display' is located on the overhead guard to the top right hand side of the operator. This frees up the operators field of vision for more productive load handling and allows the trucks status and critical functions to be easily checked. These include:

- Battery charge condition
- Hours worked
- Direction of travel
- Performance setting
- Motor temperature
- Low brake fluid
- Seat belt reminder
- Time

Load weight indication is an option as are Operator Pin Code Access and Key switch.

The dashboard of the VA series provides Plenty of storage space including a clipboard holder and space for pens, mobile phone, mp3/4 player and drinks as well as light switches and an optional 12V socket.

Masts

A full range of Yale Hi-Vis, 2 stage LFL and 2 and 3 stage FFL masts are available. Yale Hi-Vis masts are designed for durability and reliability with widely spaced channels, lift chains and main lift cylinders for maximum visibility.

Low lifetime costs

Lower maintenance costs are delivered through reduced maintenance. This reduction is primarily achieved through the use of Hall Effect sensors, 'O' Ring face seals, an electric park brake, CANbus and AC technology.

The VSM (Vehicle Systems Manager) monitors and controls key truck components and systems. The advanced thermal management system monitors component temperature and gradually adjusts performance to prevent damage to key components.

Autoregenerative braking also reduces service brake usage contributing to an increase in the life of parts. 1000 hours service intervals are standard on most components.

Options

- Accutouch mini-levers
- Return to set tilt
- Foot directional control
- Lighting kits, including LED lights
- Audible back up alarm
- Visible alarm strobe
- Load weight indicator
- Impact sensor
- Telescoping steering column with tilt memory
- Cold storage/freezer packages
- Drive-in rack overhead guard
- Integral sideshift
- Dual rear view mirrors

NACCO Materials Handling Limited trading as **Yale Europe Materials Handling**
Flagship House, Reading Road North, Fleet, Hampshire GU51 4WD, United Kingdom.
Tel: + 44 (0) 1252 770700 Fax: + 44 (0) 1252 770784
www.yale-forklifts.eu

Country of Registration: England. Company Registration Number: 02636775

Safety. This truck conforms to the current EU requirements. Specification is subject to change without notice.

Publication part no. 258985444 Rev.00
Printed in The United Kingdom (081110HG) EN

Yale is a registered trade mark.
© Yale Europe Materials Handling 2011. All rights reserved.

Truck shown with optional equipment